SOMANY Bathware

Product Image





Description	TULIP CORNER BASIN		
USP	Corner basin , round shape with tap hole, elongated installation holes , compact size, compatible as table top & wallhung provison.		
Colour	White		
Technical details	Diameter of tap hole Ø32 ±2		
	ID of waste outlet hole Ø45 ±2		
	Horizontal distance between the centre line of tap hole and centre line of the waste outlet hole ≤188 mm		
	Table top and wall hung both mounting option.		
	Vertical Outlet		
	Material: Ceramic - Vitreous China		
Product Dimensions	385x430x150mm		
Product net weight	7.63kg(Approx)		
Product gross weight	7.8kg(Approx)		
Certifications	ISO and CE certificate	ISO 9001:2015 ISO 14001:2015 ISO 45001:2018 EN 14688	
	All technical dimensions are in accordance to British standards and Bureau of Indian Standards		

Product Technical Drawing

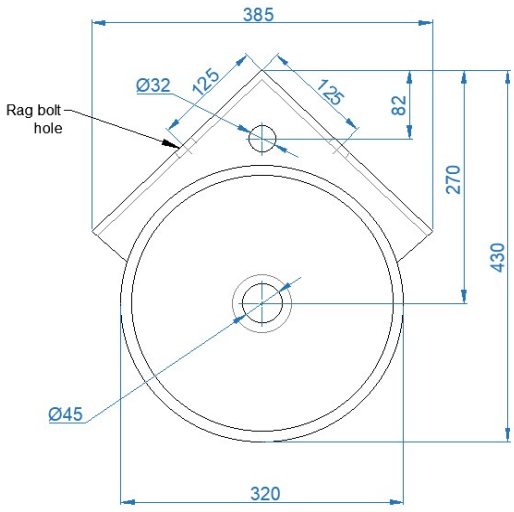

TOP VIEW

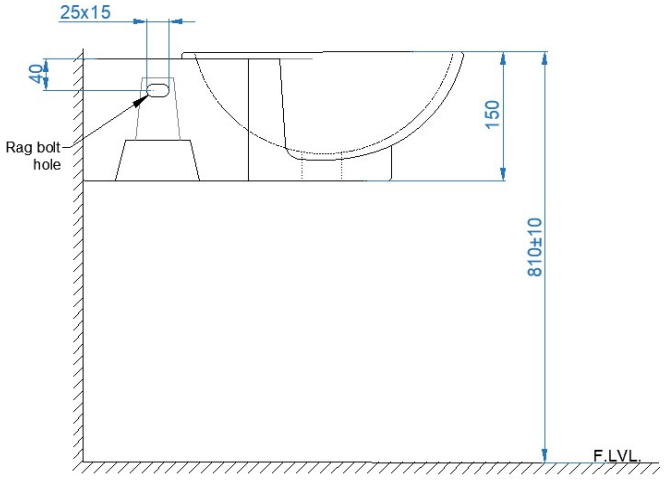

SIDE VIEW

DISCLAIMER: Our every effort has been made to ensure factual accuracy, the information presented subject to changes due to requirements in different sites, markets and/ or countries. All dimensions are in mm (Tolerance ± 5 MM). Somany reserves the right to make the necessary amendments at any time without prior notice.