SOMANY Bathware



Description	SWISS ART BASIN		
USP	Oval shape, compact design, soft edges, suitable for the small size washroom.		
Colour	White		
Technical details	ID of waste outlet hole Ø45 ±3mm		
	Vertical Outlet		
	Horizontal distance between bowl edge and the center line of the waste outlet hole ≤ 202 mm		
	Material: Ceramic - Vitreous China		
Product Dimensions	555x405x150mm		
Product net weight	9kg(Approx)		
Product gross weight	9.5kg(Approx)		
Certifications	ISO and CE certificate	ISO 9001:2015 ISO 14001:2015 ISO 45001:2018 EN 14688	
	All technical dimensions are in accordance to British standards and Bureau of Indian Standards		

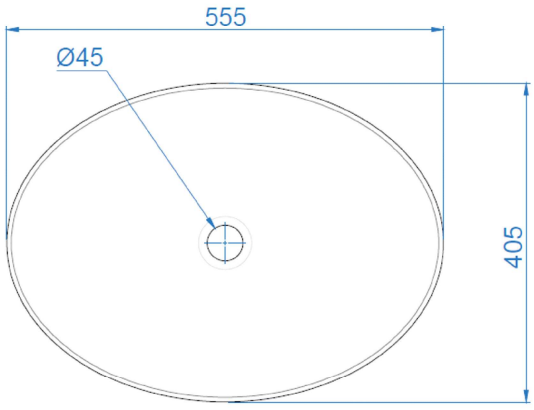

TOP VIEW

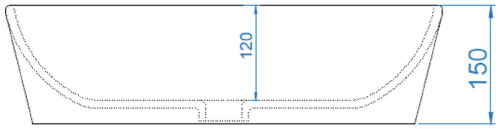

FRONT VIEW

DISCLAIMER: Our every effort has been made to ensure factual accuracy, the information presented subject to changes due to requirements in different sites, markets and/ or countries. All dimensions are in mm (Tolerance ± 5 MM). Somany reserves the right to make the necessary amendments at any time without prior notice.