SOMANY Bathware

Product Images





Description	MINI UNDER COUNTER OVAL		
USP	Oval shape, suitable for small size bathwooms, anti splash deep bowl, under counter basin.		
Colour	White		
Technical details	ID of waste outlet hole Ø45 ±3mm		
	Horizontal distance between bowl edge and the center line of the waste outlet hole ≤ 172mm		
	Vertical Outlet		
	Material: Ceramic - Vitreous China		
Product Dimensions	460x345x160mm		
Product net weight	4.4kg(Approx)		
Product gross weight	5.0kg(Approx)		
Certifications	ISO and CE certificate	ISO 9001:2015 ISO 14001:2015 ISO 45001:2018 EN 14688	
	All technical dimensions are in accordance to British standards and Bureau of Indian Standards		

Product Technical Drawing

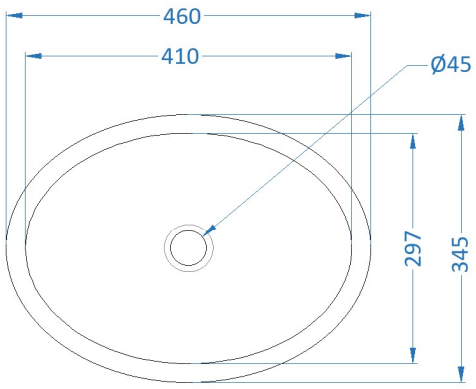

TOP VIEW

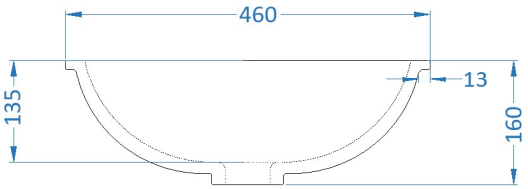

FRONT VIEW

DISCLAIMER: Our every effort has been made to ensure factual accuracy, the information presented subject to changes due to requirements in different sites, markets and/ or countries. All dimensions are in mm (Tolerance ± 5 MM). Somany reserves the right to make the necessary amendments at any time without prior notice.