SOMANY Bathware

Product Images





Description	MINI RUBIX BASIN WITH FULL PEDESTAL		
USP	Rectangular shape , soft edges, unique design, anti splash deep bowl.		
Colour	White		
Technical details	Tap hole diameter Ø33 ±2mm		
	ID of waste outlet hole Ø45 ±3mm		
	Vertical Outlet		
	Horizontal distance between the centre line of tap hole and centre line of the waste outlet hole ≤150mm		
	Material: Ceramic - Vitreous China		
Product Dimensions	600x480x820mm		
Product net weight	27.2kg(Approx)		
Product gross weight	29.5kg(Approx)		
Certifications	ISO and CE certificate	ISO 9001:2015 ISO 14001:2015 ISO 45001:2018 EN 14688	
	All technical dimensions are in accordance to British standards and Bureau of Indian Standards		
Accessories provided	Over flow hole cap		

Product Technical Drawing

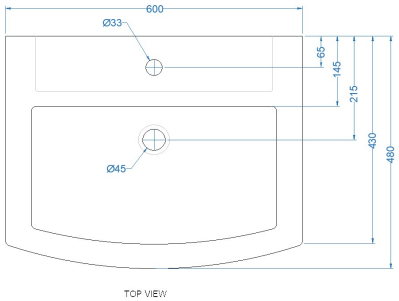

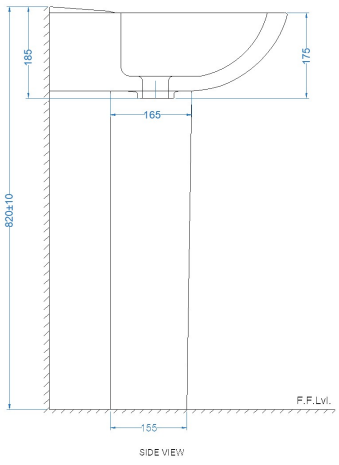

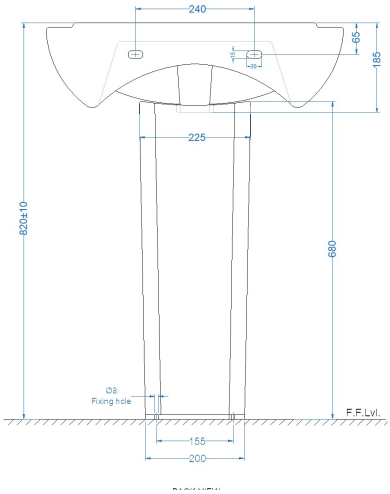

DISCLAIMER: Our every effort has been made to ensure factual accuracy, the information presented subject to changes due to requirements in different sites, markets and/ or countries. All dimensions are in mm (Tolerance ± 5 MM). Somany reserves the right to make the necessary amendments at any time without prior notice.