SOMANY Bathware

Product Image



| | | | |
|---|---|---|---|
| Description | Lauren Art Basin | | |
| USP | Oval shape with tap hole, unique design, large opening, anti splash deep bowl | | |
| Colour | White | | |
| Technical details | ID of waste outlet hole Ø45 ±3mm | | |
| | ID of tap hole Ø35 ±2mm | | |
| | Vertical Outlet | | |
| | Material: Ceramic - Vitreous China | | |
| Product Dimensions | 600 x 405 x 165mm | | |
| Product net weight | 13.4kg(Approx) | | |
| Product gross weight | 14.36kg(Approx) | | |
| Certifications | ISO and CE certificate | ISO 9001:2015<br>ISO 14001:2015<br>ISO 45001:2018<br>EN 14688 | |
| | All technical dimensions are in accordance to British standards and Bureau of Indian Standards | | |

Product Technical Drawing

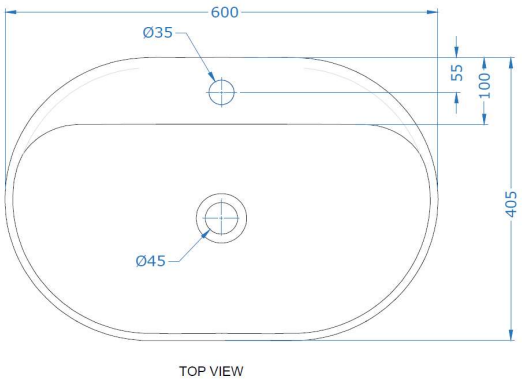


TOP VIEW

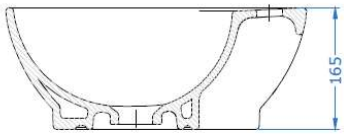


SIDE CROSS SECTION VIEW

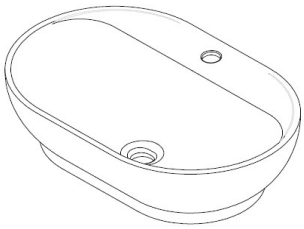

DISCLAIMER: Our every effort has been made to ensure factual accuracy, the information presented subject to changes due to requirements in different sites, markets and/ or countries. All dimensions are in mm (Tolerance ± 5 MM). Somany reserves the right to make the necessary amendments at any time without prior notice.