SOMANY Bathware

Product Images





Description	KRAYON PLUS WASH BASIN		
USP	Rectangular shape with tap hole , elongated installation holes , taper face, compact design , soft edges, suitable for the small size washroom, compatible as table top and wall hung basin.		
Colour	White		
Technical details	Tap hole diameter Ø33 ±3mm		
	ID of waste outlet hole Ø45 ±3mm		
	Horizontal distance between the tap hole and the center line of the waste outlet hole ≤ 130mm		
	Vertical Outlet		
	Compatible as table top and wall hung basin		
	Material: Ceramic - Vitreous China		
Product Dimensions	490x435x130mm		
Product net weight	11.27kg(Approx)		
Product gross weight	12.3kg(Approx)		
Certifications	ISO and CE certificate	ISO 9001:2015 ISO 14001:2015 ISO 45001:2018 EN 14688	
	All technical dimensions are in accordance to British standards and Bureau of Indian Standards		

Product Technical Drawing

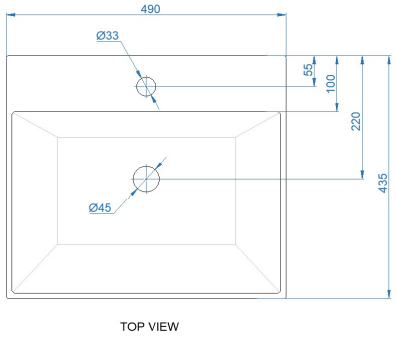

TOP VIEW

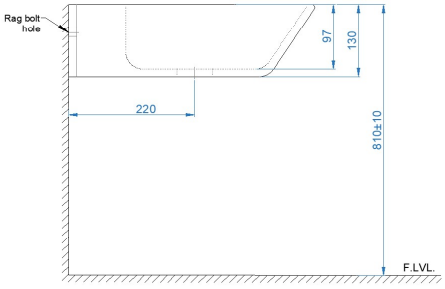

SIDE VIEW

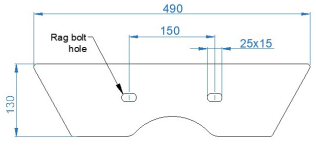

BACK VIEW

DISCLAIMER: Our every effort has been made to ensure factual accuracy, the information presented subject to changes due to requirements in different sites, markets and/ or countries. All dimensions are in mm (Tolerance ± 5 MM). Somany reserves the right to make the necessary amendments at any time without prior notice.