SOMANY Bathware

Product Image



Description	JUPITER WASH BASIN WITH HALF PEDESTAL		
USP	Square shape with tap hole, elongated fixing holes, suitable for smaller bathrooms, comptible with full and half pedestal, aesthetic design.		
Colour	White		
Technical details	Diameter of tap hole Ø33±2		
	ID of waste outlet hole Ø45 ±3		
	Horizontal distance between the centre line of tap hole and centre line of the waste outlet hole ≤120mm		
	Vertical Outlet		
	Material: Ceramic - Vitreous China		
Product Dimensions	515x405x465mm		
Product net weight	21.5kg(Approx)		
Product gross weight	23.2kg(Approx)		
Certifications	ISO and CE certificate	ISO 9001:2015 ISO 14001:2015 ISO 45001:2018 EN 14688	
	All technical dimensions are in accordance to British standards and Bureau of Indian Standards		

Product Technical Drawing

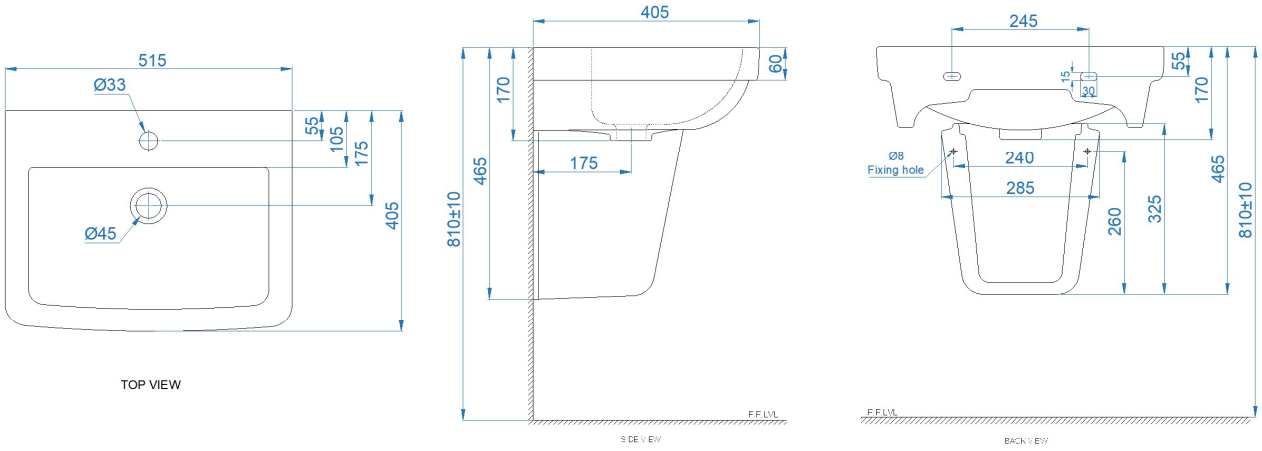

DISCLAIMER: Our every effort has been made to ensure factual accuracy, the information presented subject to changes due to requirements in different sites, markets and/ or countries. All dimensions are in mm (Tolerance ± 5 MM). Somany reserves the right to make the necessary amendments at any time without prior notice.