SOMANY Bathware

Product Images



Description	FOLK WALL HUNG BASIN WITH HALF PEDESTAL		
USP	Rectangular shape, compact design, suitable for small bathrooms with tap hole and over flow hole, elongated fixing hole.		
Colour	White		
Technical details	Tap hole diameter Ø35 ±2mm		
	ID of waste outlet hole Ø45 ±2mm		
	Vertical Outlet		
	Material: Ceramic - Vitreous China		
Product Dimensions	405x370x410mm		
Product net weight	14.5kg(Approx)		
Product gross weight	15.4kg(Approx)		
Certifications	ISO and CE certificate	ISO 9001:2015 ISO 14001:2015 ISO 45001:2018 EN 14688	
	All technical dimensions are in accordance to British standards and Bureau of Indian Standards		

Product Technical Drawing

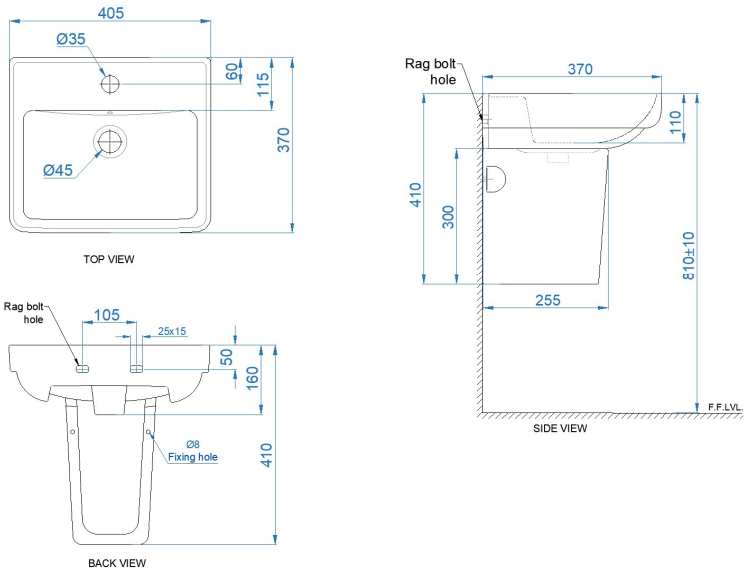

DISCLAIMER: Our every effort has been made to ensure factual accuracy, the information presented subject to changes due to requirements in different sites, markets and/ or countries. All dimensions are in mm (Tolerance ± 5 MM). Somany reserves the right to make the necessary amendments at any time without prior notice.