SOMANY Bathware

Product Images



Description	SYLVIE ART BASIN		
USP	Rectangular shape, slim rim, aesthetic design.		
Colour	Glossy white		
Technical details	ID of waste outlet hole Ø45 ±3mm		
	Vertical Outlet		
	Material: Ceramic - Vitreous China		
Product Dimensions	505x340x130mm		
Product net weight	9.390kg(Approx)		
Product gross weight	10.0kg(Approx)		
Certifications	ISO and CE certificate	ISO 9001:2015 ISO 14001:2015 ISO 45001:2018 EN 14688	
	All technical dimensions are in accordance to British standards and Bureau of Indian Standards		

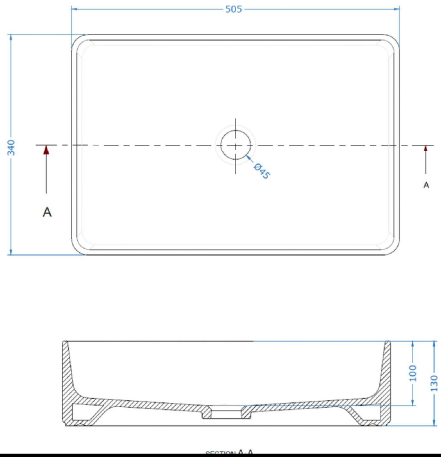

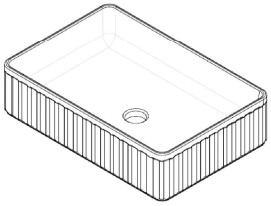

DISCLAIMER: Our every effort has been made to ensure factual accuracy, the information presented subject to changes due to requirements in different sites, markets and/ or countries. All dimensions are in mm (Tolerance ± 5 MM). Somany reserves the right to make the necessary amendments at any time without prior notice.