SOMANY Bathware

Product Images





Description	INPULSE WASH BASIN		
USP	Square shape, slim rim, unique design, suitable for smaller bathroom, table top and wall hung both mounting options.		
Colour	Glossy white		
Technical details	ID of waste outlet hole Ø45 ±3mm		
	Vertical Outlet		
	Material: Ceramic - Vitreous China Table top and wall hung both mounting options.		
Product Dimensions	305x310x145mm		
Product net weight	6.8kg(Approx)		
Product gross weight	6.9kg(Approx)		
Certifications	ISO and CE certificate	ISO 9001:2015 ISO 14001:2015 ISO 45001:2018 EN 14688	
	All technical dimensions are in accordance to British standards and Bureau of Indian Standards		

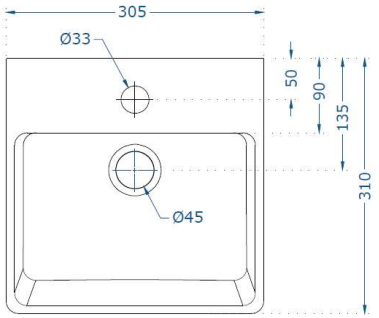

TOP VIEW

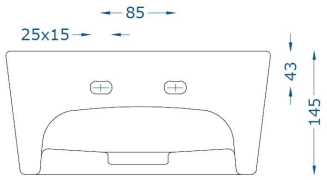

BACK VIEW

DISCLAIMER: Our every effort has been made to ensure factual accuracy, the information presented subject to changes due to requirements in different sites, markets and/ or countries. All dimensions are in mm (Tolerance ± 5 MM). Somany reserves the right to make the necessary amendments at any time without prior notice.