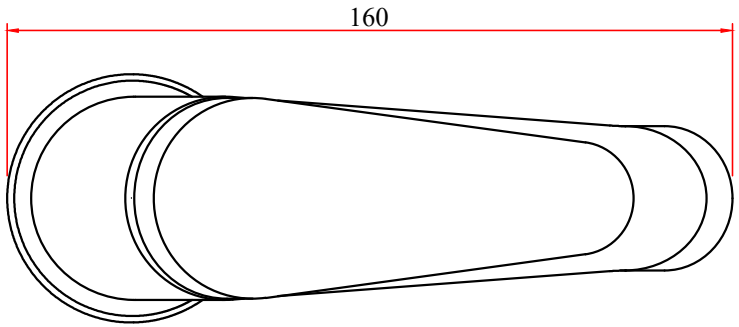

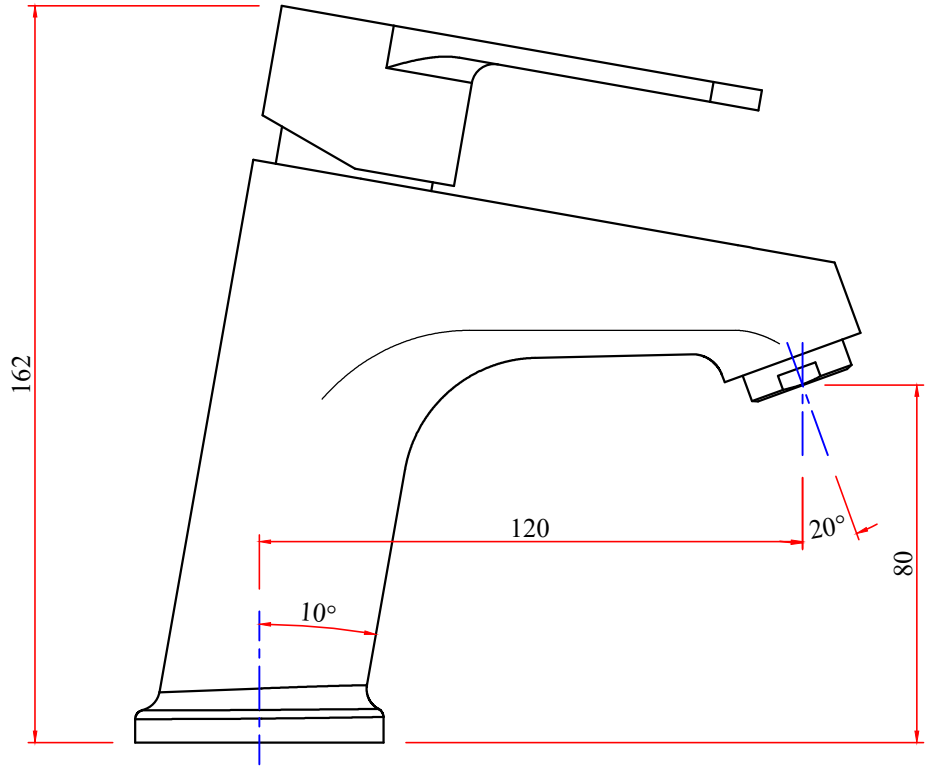

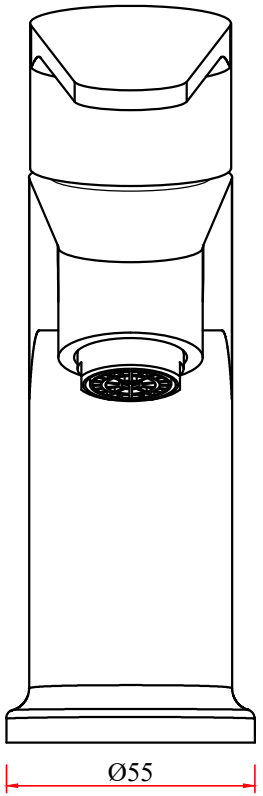

SPANDA:- SINGLE LEVER BASIN MIXER

CODE:- 272110440011