SOMANY Bathware

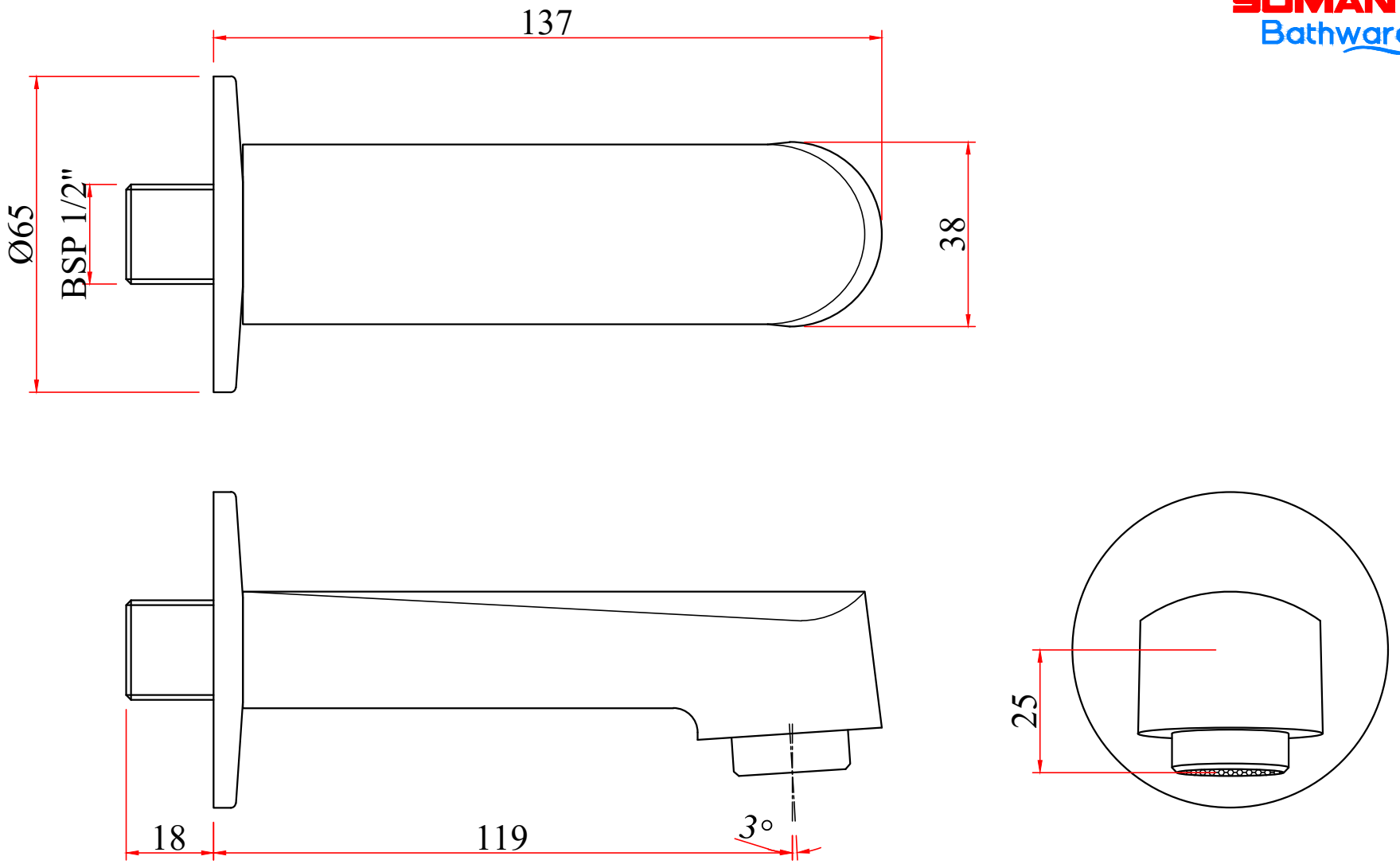

SPANDA:- BATH TUB SPOUT

CODE :- 272210440141