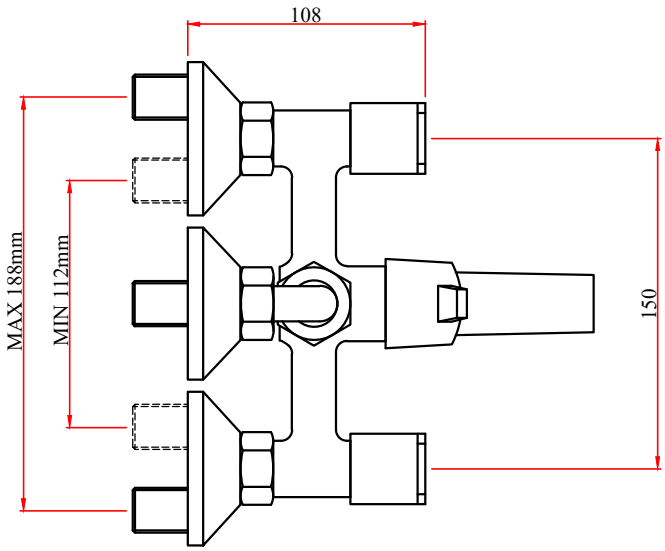


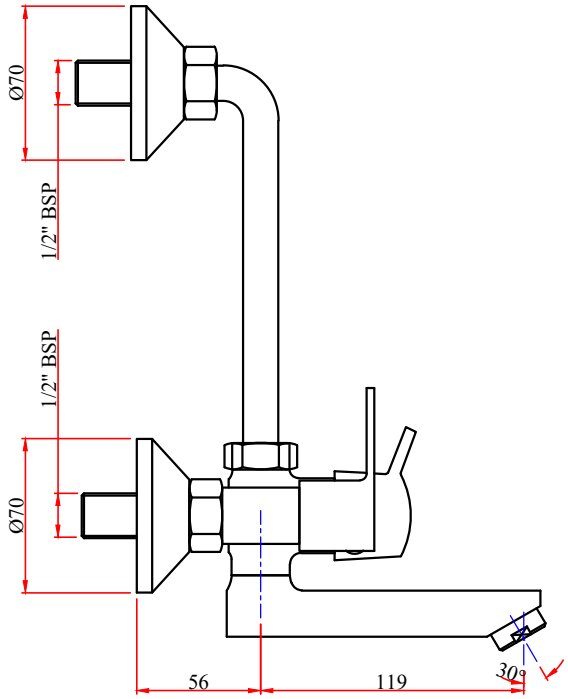


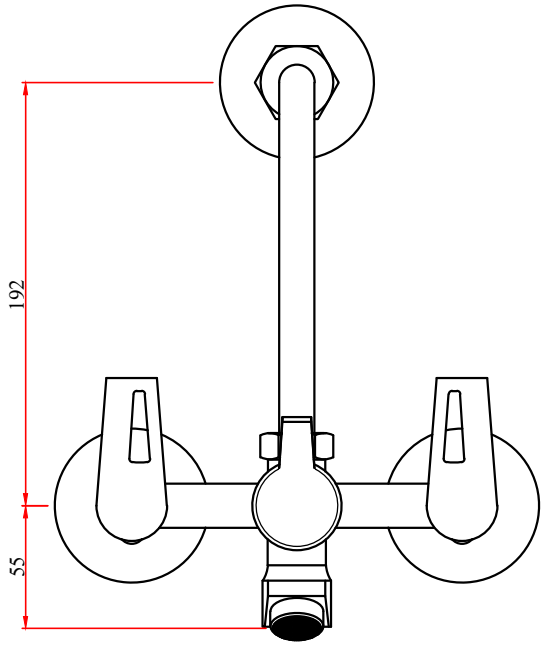


**JUPITER:-WALL MIXER WITH BEND**

**CODE:- 272201420011**