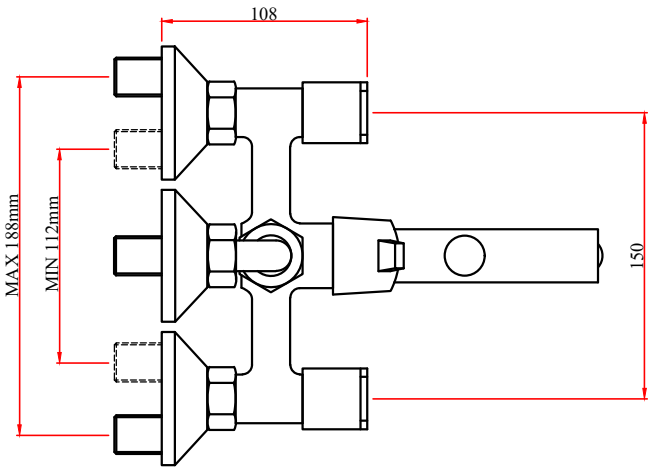

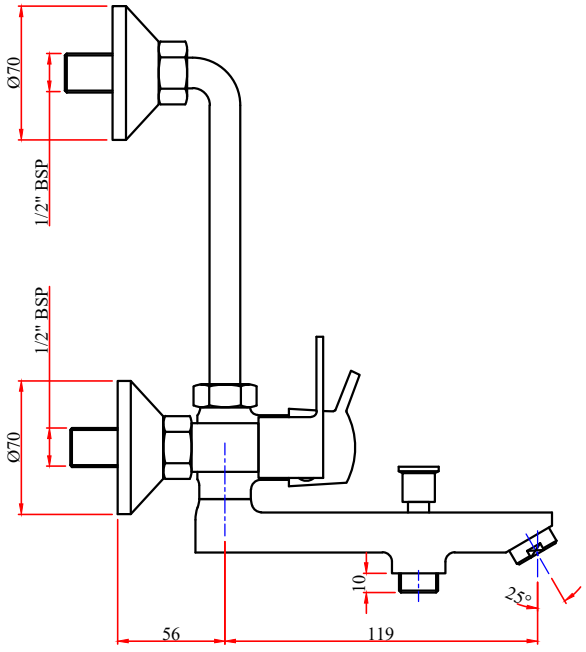

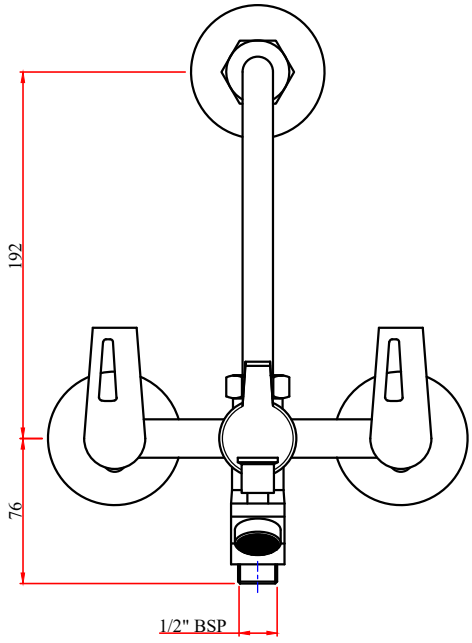

JUPITER:-WALL MIXER 3 IN 1

CODE:- 272201420051