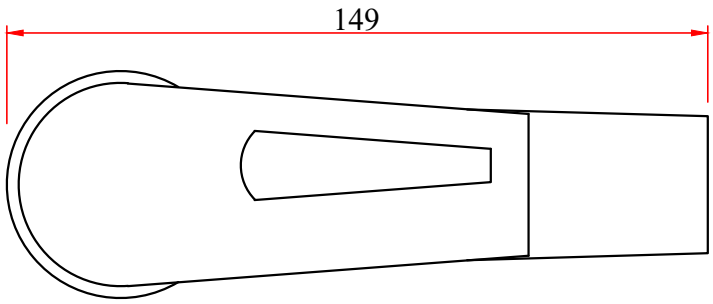

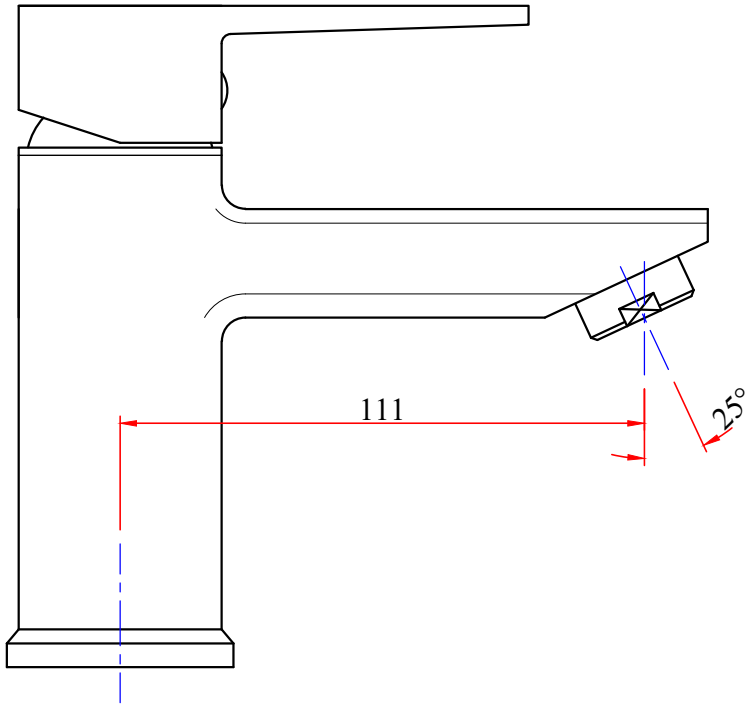

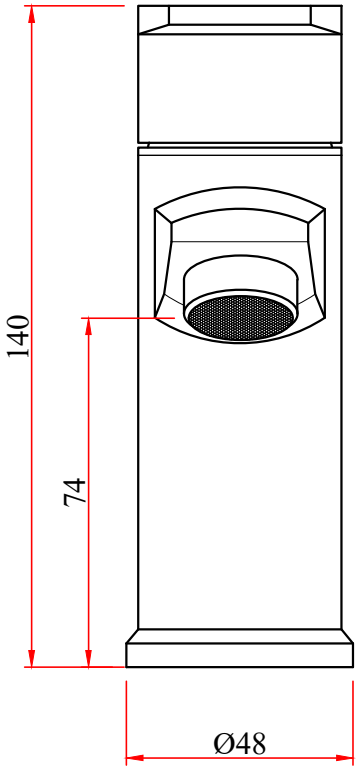

JUPITER:-SINGLE LEVER BASIN MIXER

CODE:- 272111420041