SOMANY Bathware

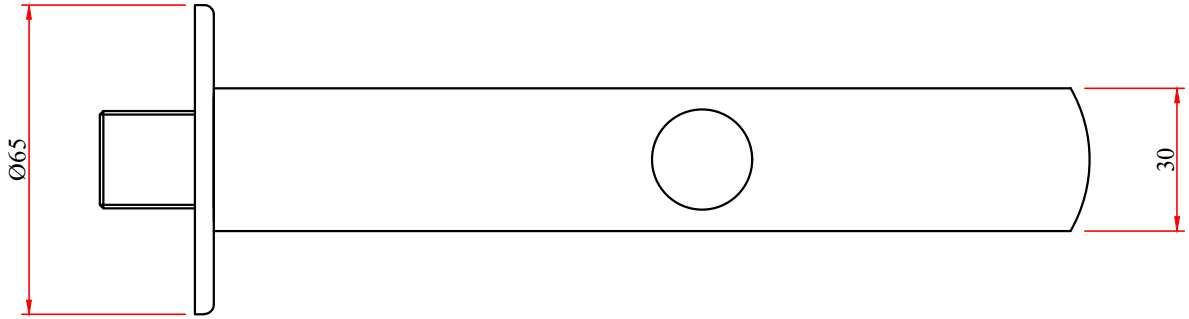

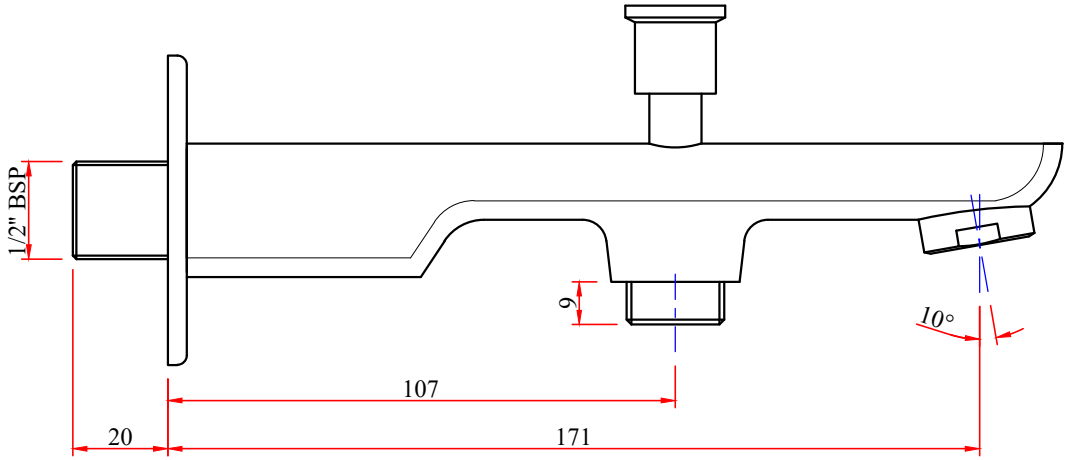

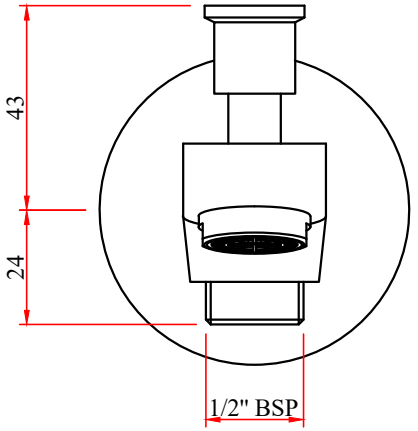

JUPITER:-BATH TUB SPOUT WITH BUTTON

CODE:- ----------