SOMANY Bathware

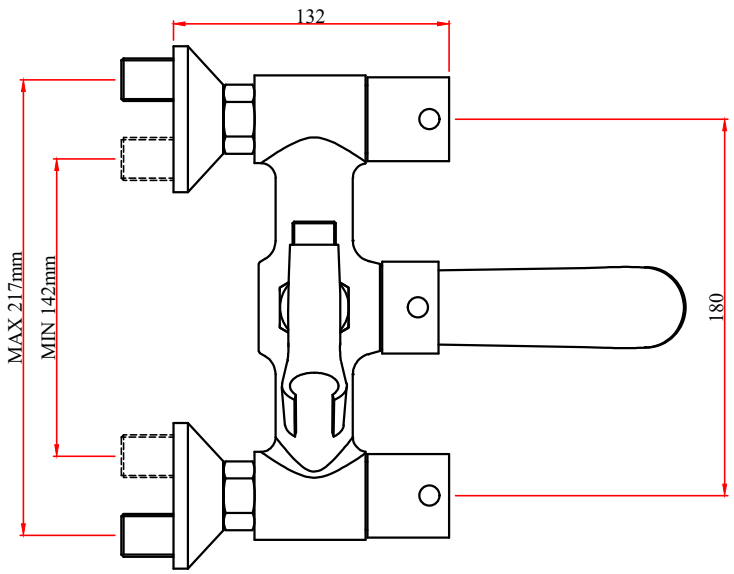

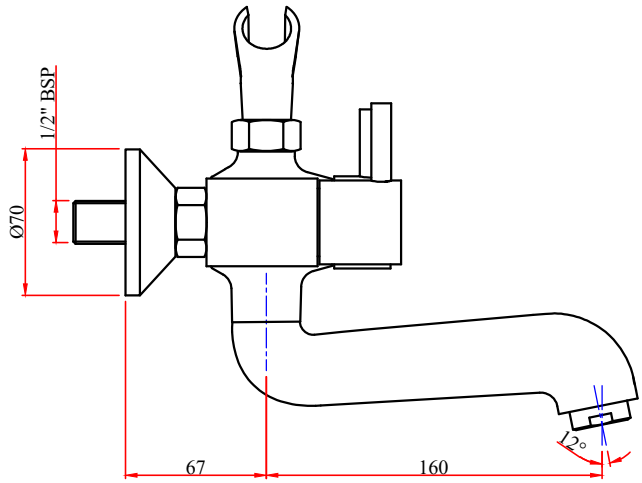

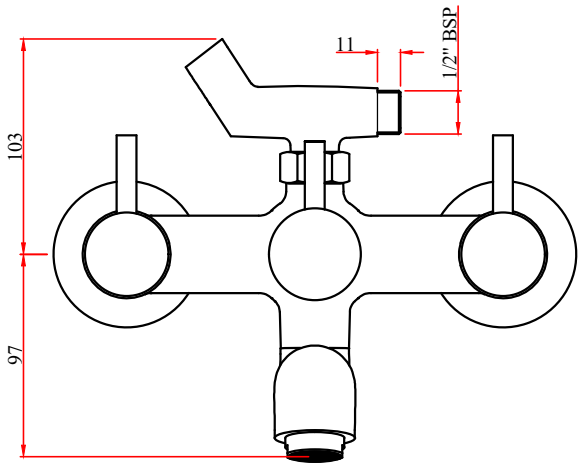

FLORENCE:- WALL MIXER WITH CRUTCH

CODE:- 272200190021