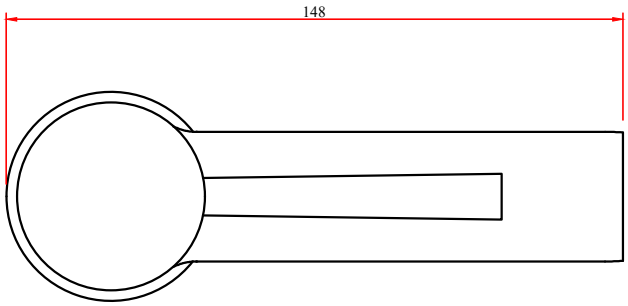

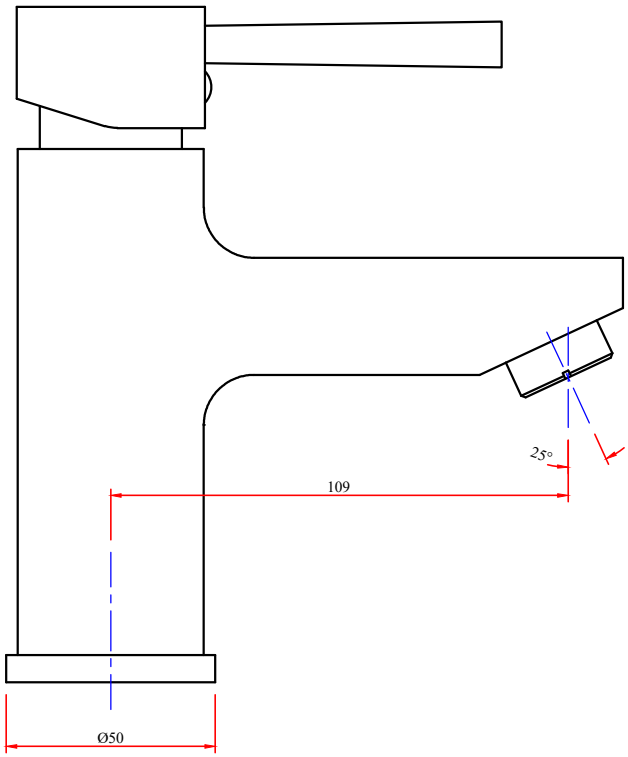

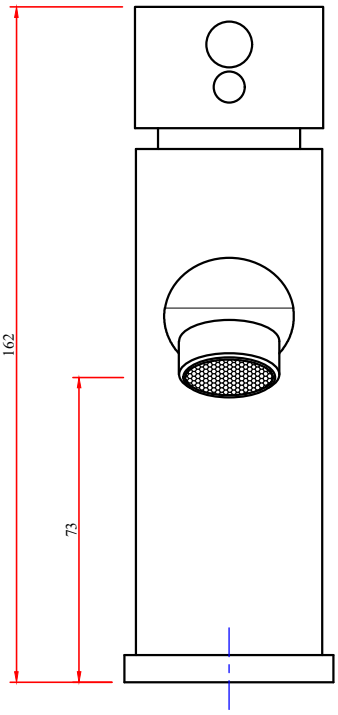

FLORENCE:- SINGLE LEVER BASIN MIXER

CODE:- 272110190011