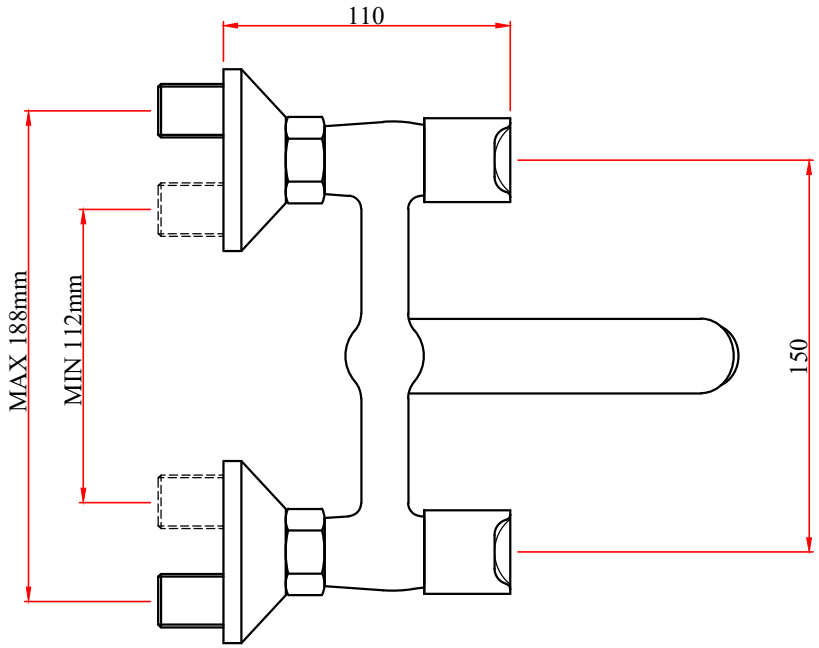

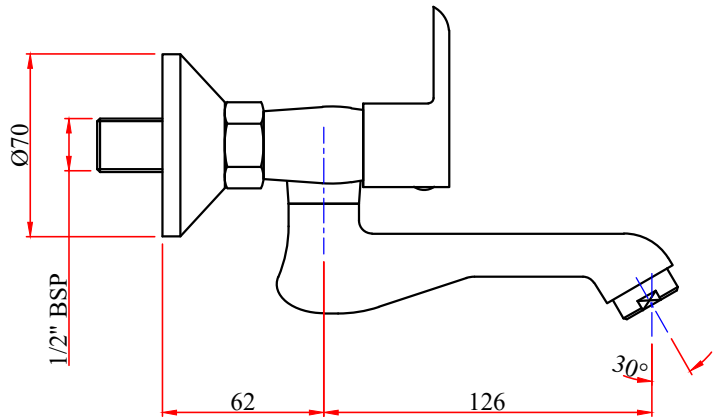

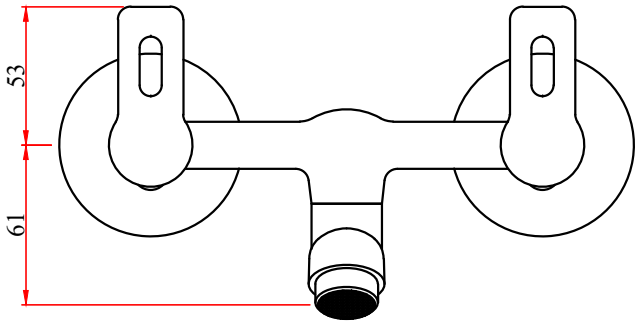

CASPER:-WALL MIXER NON TELEPHONIC

CODE:- 272201410031