SOMANY Bathware

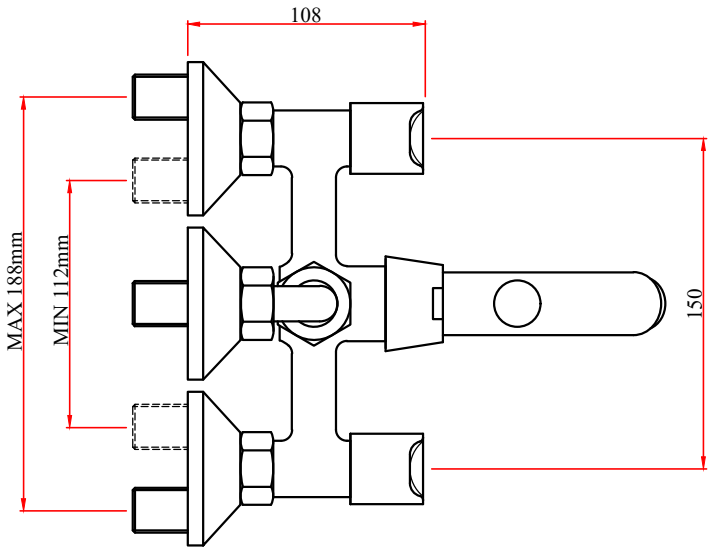

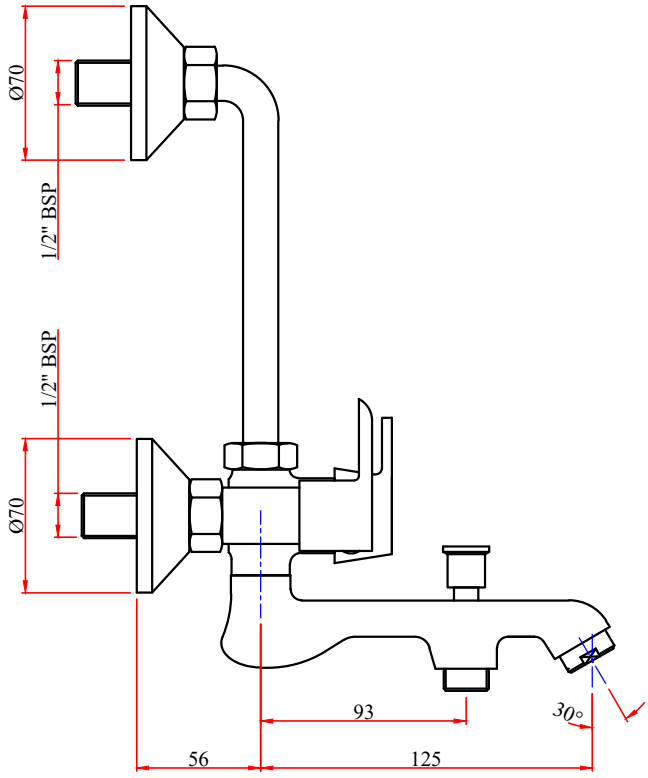

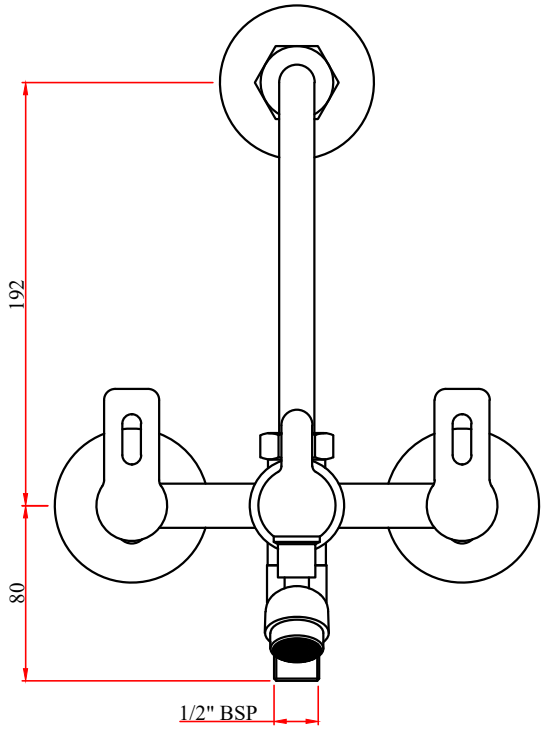

CASPER:-WALL MIXER 3 IN 1

CODE:- 272201410051