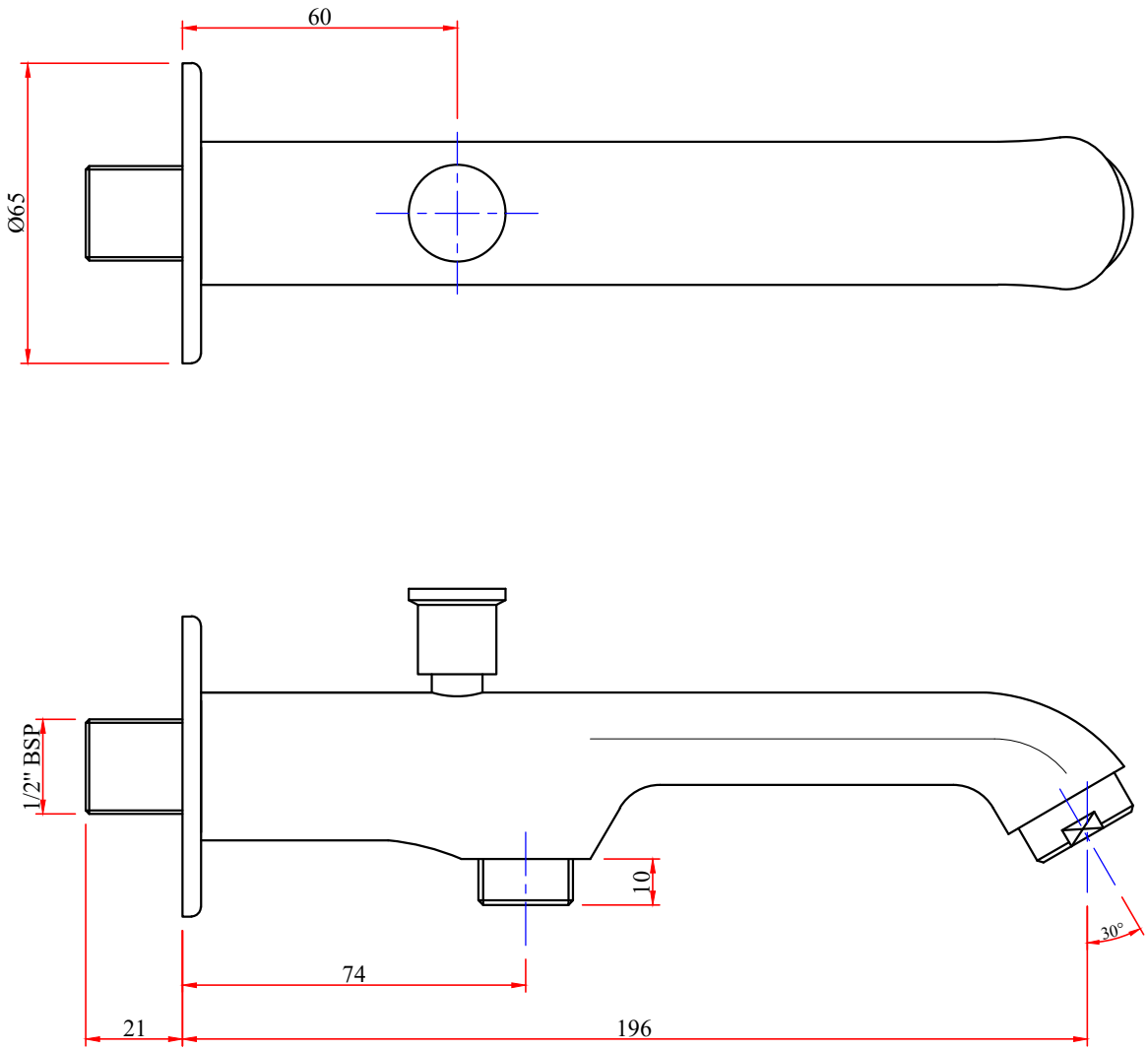

CASPER:-BATH TUB SPOUT WITH BUTTON

CODE:- 272211410121